Geneva

20 801g Low Spout Lavatory Wideset - WaterCare

Description

Cast Brass
GROHE SilkMove® Ceramic Cartridges
GROHE WaterCare - 30% Water Savings.
WaterSense® Labeled
Pop-up drain
Sold Less Handles

Flow Rate

1.5 gpm

Code Compliance

ASME/ANSI A112.18.1M
ANSI/NSF Standard 61
CSA Standard B125.1-05

Available Finishes

00E Chrome
ENE Infinity Brushed Nickel

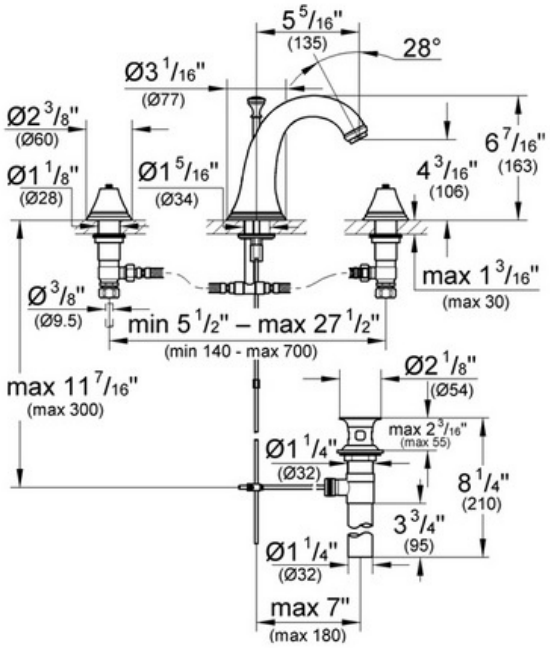

GROHE America, Inc 241 Covington Drive, Bloomingdale, IL 60108 | 630-582-7711 | Fax: 630-582-7722
GROHE Canada, Inc | 1230 Lakeshore Road East, Mississauga, Ontario | Canada L5E 1E9 | 905.271.2929 | Fax: 905.271.9494