Geneva

20 801 Low Spout Lavatory Wideset

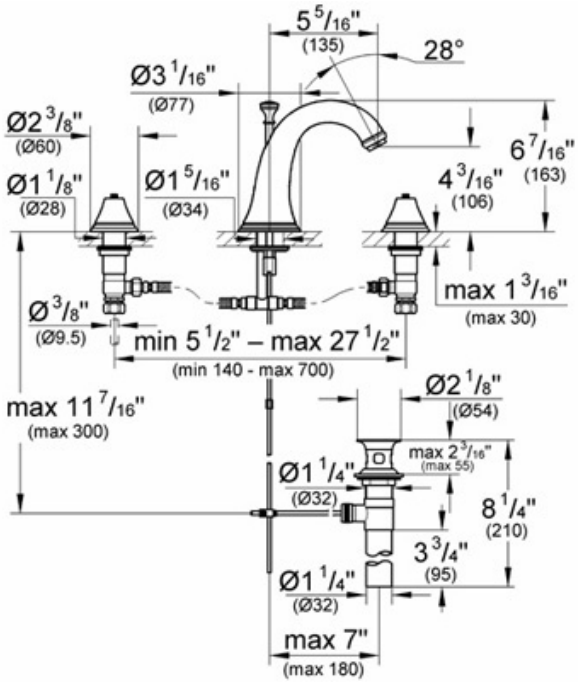

Description

Cast brass spout
GROHE SilkMove® ceramic cartridges
Pop-up drain
Sold less handles

Shown with:
18 733 cross handles
18 734 lever handles

Flow Rate

2.2 gpm at 60 psi,
2.5 gpm at 80 psi (9.5 lpm)

Code Compliance

ASME/ANSI A112.18.1M
ANSI/NSF Standard 61

Available Finishes

000 Starlight® Chrome
R00 Infinity Polished Brass
AV0 Infinity Satin Nickel
RR0 Velour Chrome
EN0 Infinity Brushed Nickel

GROHE America, Inc 241 Covington Drive, Bloomingdale, IL 60108 | 630-582-7711 | Fax: 630-582-7722
GROHE Canada, Inc | 1230 Lakeshore Road East, Mississauga, Ontario | Canada L5E 1E9 | 905.271.2929 | Fax: 905.271.9494