96-400-B30-L-V

Temptrol® *Pressure-Balancing mixing valve with lever handle and adjustable stop screw to limit handle turn. Diverter spout, wall/hand shower with flexible 5′ metal hose, in-line vacuum breaker, wall connection and flange, 30″ slide bar for hand shower mounting.*

Suffix X: *Integral service stops—allows water shut-off at valve for service*

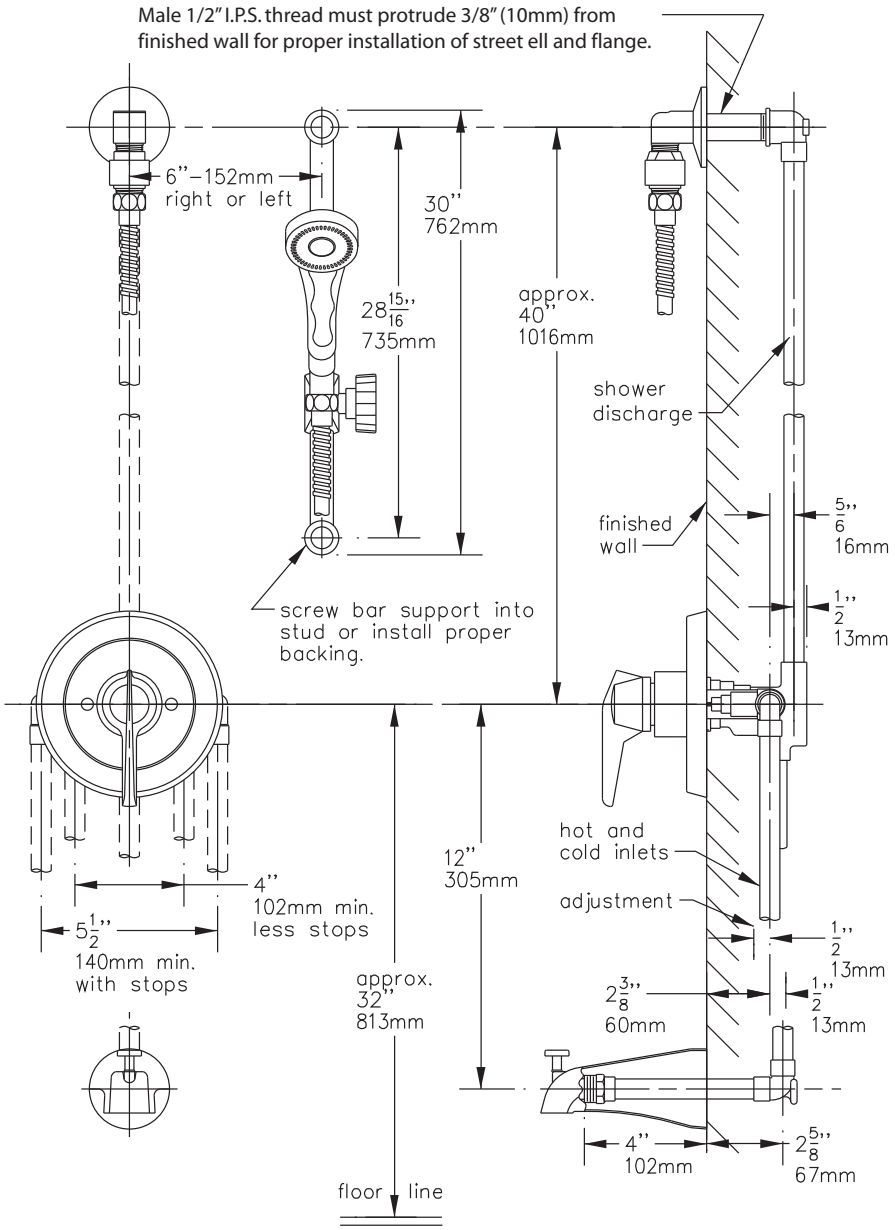

ADA

This drawing to be used for rough-in installation only. All floor to center dimensions optional. Concealed piping and fittings not furnished by manufacturer. ***Dimensions are for ADA compliance (Americans with Disabilities Act)*** *consult ADAAG or your state regulations for proper product choice and mounting locations. For complete installation, adjustment and service information see installation instructions.*

Symmons Industries, Inc. ▪ 31 Brooks Drive ▪ Braintree, MA 02184
(800) 796-6667, (781) 848-2250 ▪ Fax (800) 961-9621, (781) 843-3849
Website: www.symmons.com ▪ Email: customerservice@symmons.com

©2003, 2008 Symmons Industries, Inc. Printed in U.S.A. ▪ 050708

SYMMONS®
the smart choice™