ROMAN TUB FAUCET

- ***Traditional Collection***
- ***4-Hole Installation***
- ***Rough-in Kit Included***

STANDARD SPECIFICATIONS
- Washerless cartridge
- Copper tube inlet with 1/2" CC connection
- NEOPERL® stream straightener 2.4gpm min @ 20psi
- Hand-shower 2.5gpm max @ 80psi

FINISHES INCLUDE
- Chrome (UF65040)
- Brushed nickel (UF65043)
- Oil rubbed bronze (UF65045)

WARRANTY
- Limited lifetime warranty on workmanship and materials to the original purchaser

COMPLIES WITH
- NSF 61-9
- ASME A112.18.1
- CSA B125.1
- cUPC

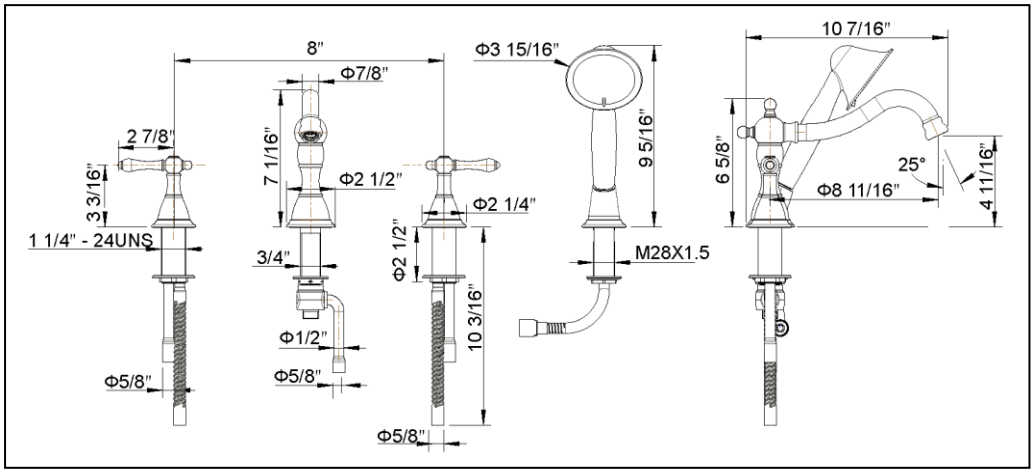

ULTRA® FAUCETS

tel. 888-OK-ULTRA (658-5872) • fax. 949-225-6099 • http://www.ultrafaucets.com

This specification is provided for reference only. Ultra Faucets reserves the right to modify specifications and materials without notice or obligation.