MOEN

Buy it for looks. Buy it for life.®

Illustrated Parts

Four Function Handshower

MODEL	TYPE	FINISH
3867	Wand	Chrome
3867AZ	Wand	Antique Bronze
3867BB	Wand	Brushed Bronze
3867BN	Wand	Brushed Nickel
3867CP	Wand	Chrome/Polished Brass
3867ORB	Wand	Oil Rubbed Bronze
3867P	Wand	Polished Brass
3867PM	Wand	Platinum
3867ST	Wand	Satine

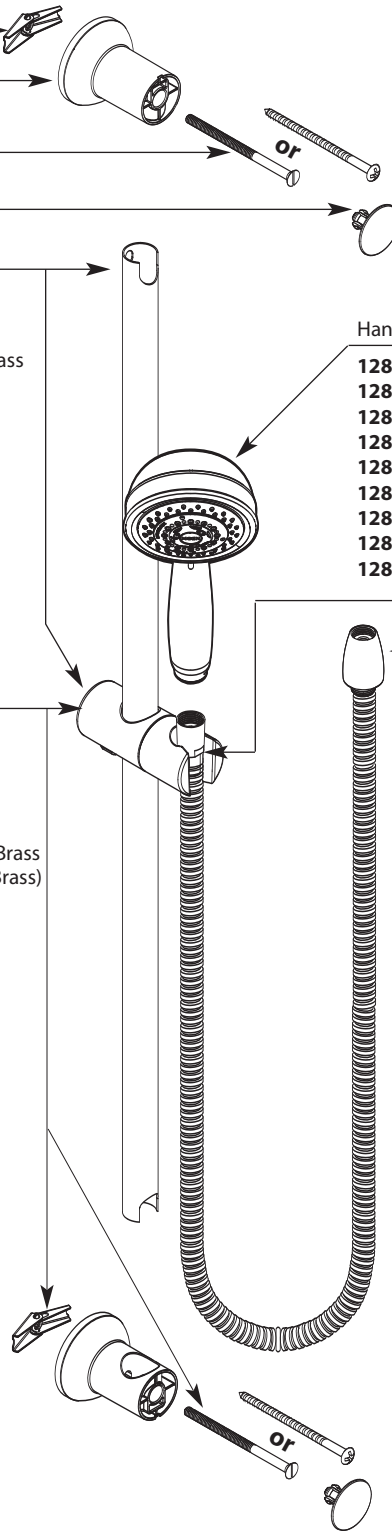

Slidebar
(includes brackets, bar and slider)

A735	Chrome
A735BB	Brushed Bronze
A735BN	Brushed Nickel
A735CP	Chrome/Polished Brass
A735ORB	Oil Rubbed Bronze
A735P	Polished Brass
A735PM	Platinum
A735ST	Satine

Plug Button

146670	Chrome
146670BB	Brushed Bronze
146670BN	Brushed Nickel
146670ORB	Oil Rubbed Bronze
146670P	Polished Brass
146670PM	Platinum
146670AZ	Antique Bronze
146670ST	Satine

HandShower

128875	Chrome
128875AZ	Antique Bronze
128875BB	Brushed Bronze
128875BN	Brushed Nickel
128875CP	Chrome/Polished Brass
128875ORB	Oil Rubbed Bronze
128875P	Polished Brass
128875PM	Platinum
128875ST	Satine

Hose

A726	Chrome
A726ST	(Used with Satine and Brushed Nickel)
A726P	Polished Brass
A726PM	Platinum
A726AZ	Antique Bronze
A726BB	Brushed Bronze
A726BR	(Used with Oil Rubbed Bronze and Wrought Iron)

Slider

137034	Chrome
137034AZ	Antique Bronze
137034BB	Brushed Bronze
137034BN	Brushed Nickel
137034ORB	Oil Rubbed Bronze
137034P	(Used with Polished Brass & Chrome/Polished Brass)
137034PM	Platinum
137034ST	Satine

Vacuum Breaker

A714	Chrome
A714ST	(Used with Satine and Brushed Nickel)
A714WR	Wrought Iron
A714AZ	Antique Bronze
A714BB	Brushed Bronze
A714P	Polished Brass
A714PM	Platinum
A714ORB	Oil Rubbed Bronze

Optional Service Kit

A750	Secure Mount (mounting hardware)