CORDLESS JIG SAW MODEL 4330DWA

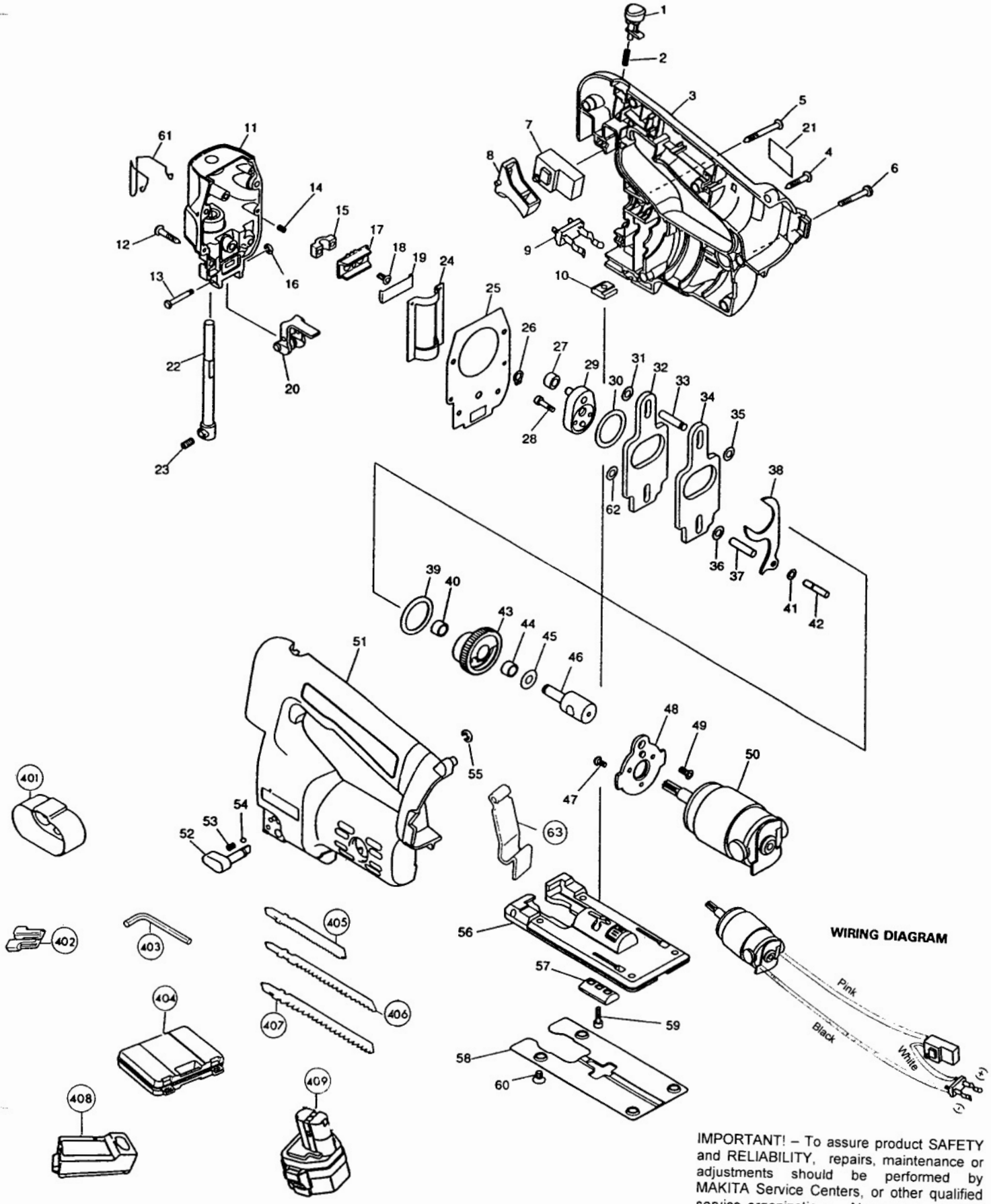

IMPORTANT! – To assure product SAFETY and RELIABILITY, repairs, maintenance or adjustments should be performed by MAKITA Service Centers, or other qualified service organizations. Always use MAKITA replacement parts.

Fig.	Part No.	Qty. Used	Description
1	416644-0	1	SWITCH BUTTON
2	233194-8	1	COMPRESSION SPRING 4
3	183093-3	1	HOUSING SET, (Inc. 1 ea. Hex. Nut M4 931102-0, Inc. Fig. 51)
4	265995-6	6	TAPPING SCREW 4x18
5	266050-7	1	TAPPING SCREW 4x30
6	911148-2	1	PAN HEAD SCREW M4x25
7	651976-0	1	SWITCH TG72BD
8	416642-4	1	SWITCH LEVER
9	643909-9	1	BATTERY HOLDER
10	164749-7	1	HOLDER
11	151689-8	1	GEAR HOUSING COVER CPL.
12	265995-6	4	TAPPING SCREW 4x18
13	256693-3	1	HEADED PIN 4
14	231314-8	2	COMPRESSION SPRING 4
15	316608-3	1	HOLDER
16	961017-7	1	STOP RING E-3
17	310028-3	1	SLIDER
18	265035-0	2	C. HEAD SCREW M4x10
19	344232-2	1	THRUST PLATE
20	151426-0	1	RETAINER COMPLETE
22	165089-6	1	ROD
23	265894-2	1	SET H. S. HEAD BOLT M6x8
24	344137-6	1	SLIDE PLATE
25	421692-6	1	GASKET
26	961004-6	1	RETAINING RING S-8
27	212010-7	1	NEEDLE BEARING 607
28	922126-7	2	H. S. HEAD BOLT M4x16
29	152454-8	1	CRANK COMPLETE
30	253792-2	1	FLAT WASHER 26
31	253715-0	1	FLAT WASHER 6
32	344792-4	1	BALANCE PLATE
33	256289-0	1	PIN 6
34	344792-4	1	BALANCE PLATE
35	253715-0	1	FLAT WASHER 6
36	253715-0	1	FLAT WASHER 6
37	256177-1	1	PIN 6
38	344134-2	1	PUSH PLATE
39	253792-2	1	FLAT WASHER 26
40	212043-2	1	NEEDLE BEARING 810
41	253811-4	1	FLAT WASHER 5
42	256235-3	1	PIN 5
43	226428-6	1	HELICAL GEAR 51
44	212043-2	1	NEEDLE BEARING 810
45	253139-0	1	FLAT WASHER 8
46	256288-2	1	PIN 8
47	266134-1	3	TAPPING SCREW ST 4x8
48	344791-6	1	MOTOR BRACKET
49	265035-0	1	C. HEAD SCREW M4x10
50	629735-0	1	DC MOTOR 12V (Inc.1 ea. Helical Gear 8, 226385-8)
51	183093-3	1	HOUSING SET (Inc. 1 ea. Hex. Nut M4, 931102-0, Inc. Fig. 3)
52	272231-3	1	LEVER 17
53	231314-8	1	COMPRESSION SPRING 4
54	216008-6	1	STEEL BALL 4
55	961018-5	1	STOP RING E-5
56	316883-1	1	BASE
57	331435-7	1	CLAMP PLATE
58	344443-9	1	BASE PLATE
59	922126-7	1	H. SOCKET HEAD BOLT M4x16
60	266055-7	4	H. SOCKET HEAD BOLT M5x8
61	322893-8	1	SAFETY WIRE
62	253715-0	1	FLAT WASHER 6
63	344532-0	1	SET PLATE

ACCESSORIES

401	414938-7	1	BATTERY COVER
402	415524-7	1	ANTI-SPLINTERING PLATE
403	783201-2	1	HEX. WRENCH 3
404	824553-3	1	PLASTIC CARRYING CASE
405	792428-3	1	JIG SAW BLADE 51
406	792429-1	1	JIG SAW BLADE 58
407	792430-6	1	JIG SAW BLADE 59
408	DC1411	1	FAST CHARGER DC1411
409	192598-2	1	HIGH CAPACITY BATTERY 1222