Logis
Logis 4-Hole Roman Tub Set Trim
Finishes : **Chrome** Part no. : **71514001**

Description

Features
- Flow: 5.0 GPM
- 90° ceramic valves
- Solid brass
- Integrated double backflow prevention
- Diverter for handshower

Comprised of
- Croma E 100 Green Vario-Jet Handshower, 2.0 GPM (#04332USA)

Required accessories
- Rough, 4-Hole Roman Tub Set (#06646USA)

Item details

Technology

Air Power

Quick Clean

Compliance

UPC

Product image
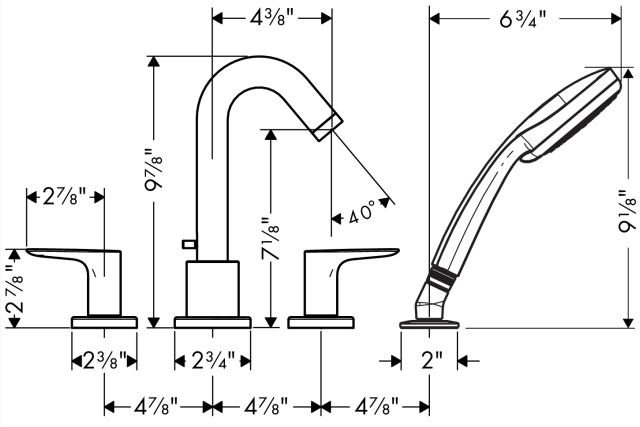
Scale drawing