MOEN

Buy it for looks. Buy it for life.®

Specifications

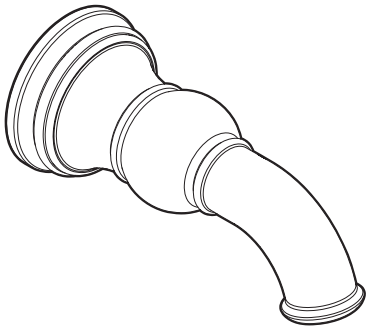

Weymouth™
Tub Spouts 1/2" Slip Fit

Models: S12105 series

DESCRIPTION
- Metal construction with various finishes identified by suffix
- Designed to be installed on a 1/2" pipe slip fit-CC connection
- Non-diverting

STANDARDS
- Third party certified to meet ASME A112.18.1/ CSA B125.1 and all applicable requirements referenced therein

WARRANTY
- Lifetime limited warranty against leaks, drips and finish defects to the original homeowner
- 10 year limited warranty when used in a multifamily installation
- 5 year limited warranty when used in a commercial installation

Visit www.moen.com/support for complete details and limitations

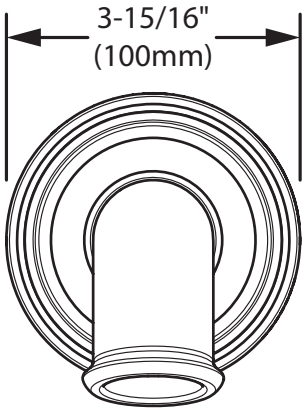

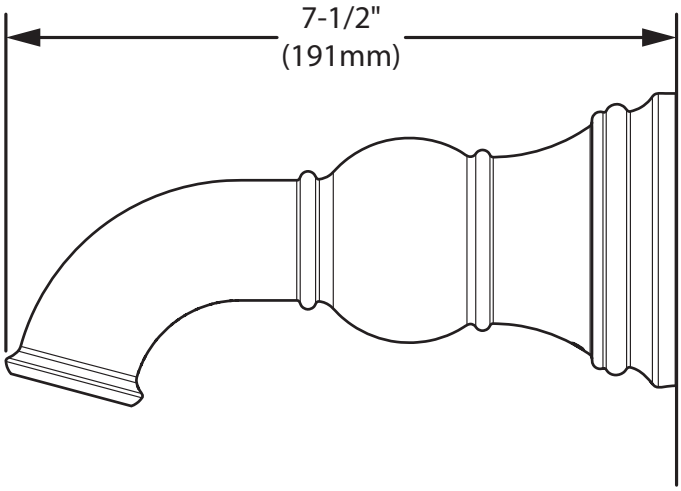

CRITICAL DIMENSIONS

(DO NOT SCALE)

FOR MORE INFORMATION CALL: 1-800-BUY-MOEN
www.moen.com

01170DOUK SPECSTD 500000TD36
Released 00