MOEN®

ILLUSTRATED PARTS

CIA™

Spring Kitchen Faucet with PowerBoost™ Pro
7822 series

ORDER BY PART NUMBER

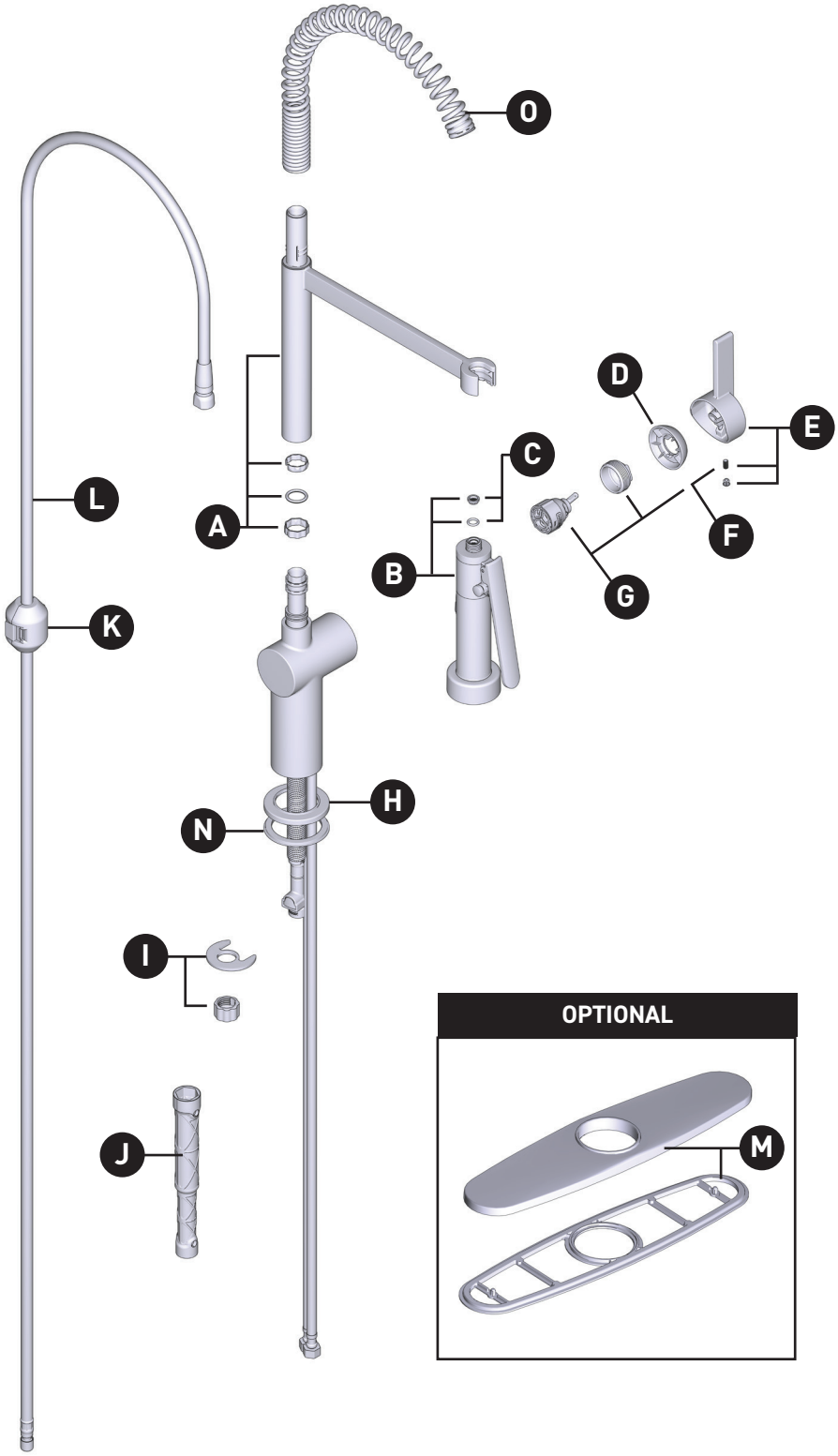

ID	Kit Number	Finish
*A	218407	See below
*B	285692	See below
C	141025	N/A
*D	207773	See below
*E	207771	See below
F	15502 *(requires 3/32" hex key)*	See below
G	160657	N/A
*H	207770	See below
I	192155	N/A
J	118305	N/A
K	199801	N/A
L	195837	Chrome
	195837BL	Matte Black
	195837BG	Brushed Gold
	195837CST	Use with Spot Resist Stainless
*M	141002 *(optional)*	See below
N	140251	N/A
*O	182001	See below

OPTIONAL

***Finish Determined by Suffix**

Finish	Description
(base model is Chrome)	Chrome
BL	Matte Black
BG	Brushed Gold
SRS	Spot Resist Stainless

11/04/2024 EXP:5/5/3 90000064002
Release012